SHAPES • CODES • DIMENSIONS

ALL STANDARD ARCHITECTURAL ORNAMENTS ARE AVAILABLE IN THE SIZES AND SHAPES ILLUSTRATED. CUSTOM DESIGNS MAY ALSO BE CREATED IN THESE SIZES AND SHAPES.

SQUARE MEDALLIONS

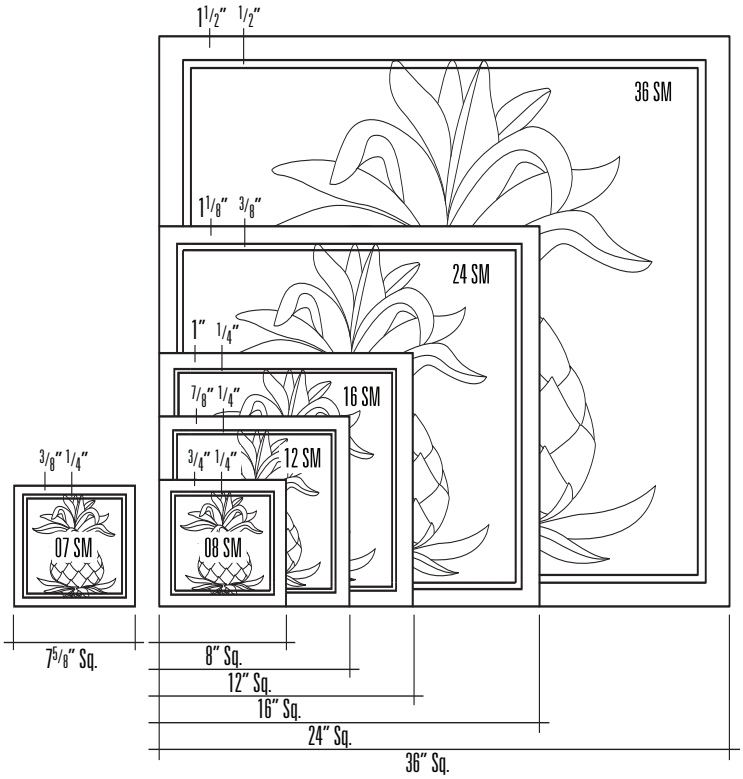

CIRCULAR MEDALLIONS

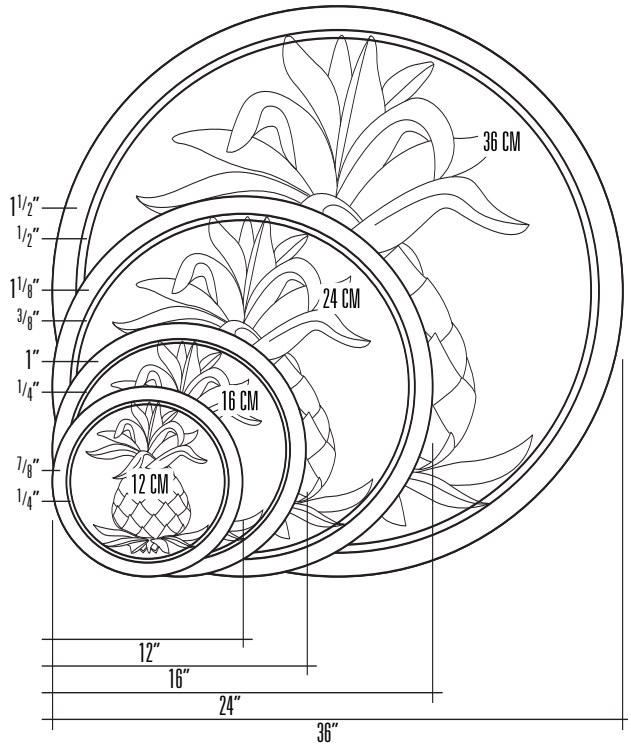

Note: All medallions 1" thick overall

HALF-ROUND MEDALLIONS

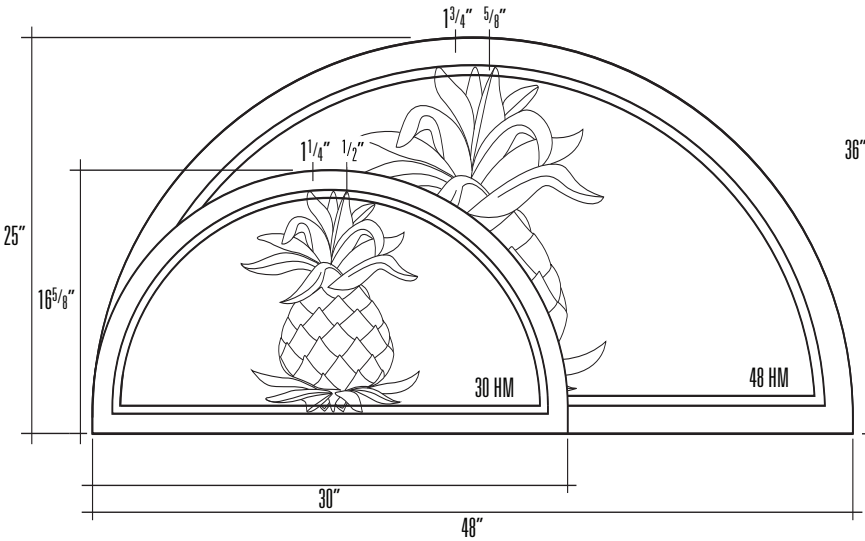

KEYSTONE MEDALLIONS

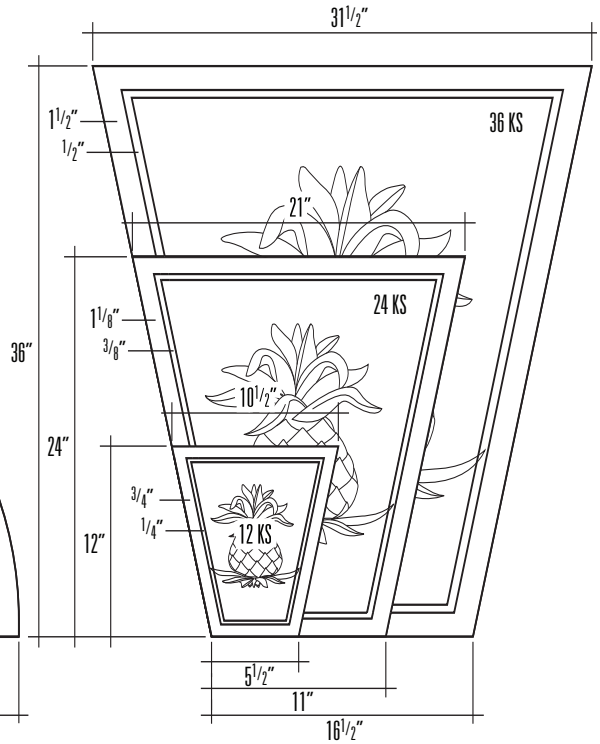

PINEAPPLE GROVE DESIGNS • ARCHITECTURAL ORNAMENTS

SHAPES CODES DIMENSIONS

SHAPES • CODES • DIMENSIONS

8 INCH FRIEZES

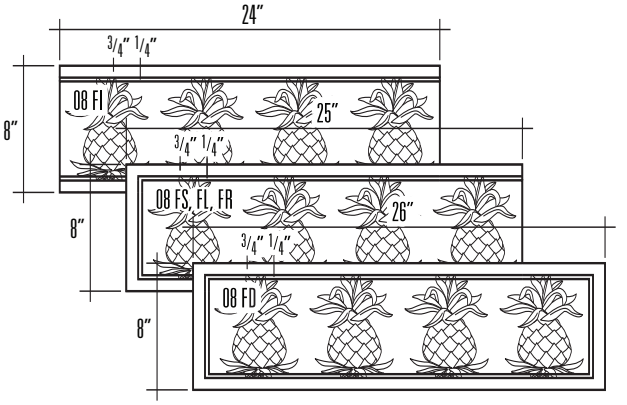

16 INCH FRIEZES

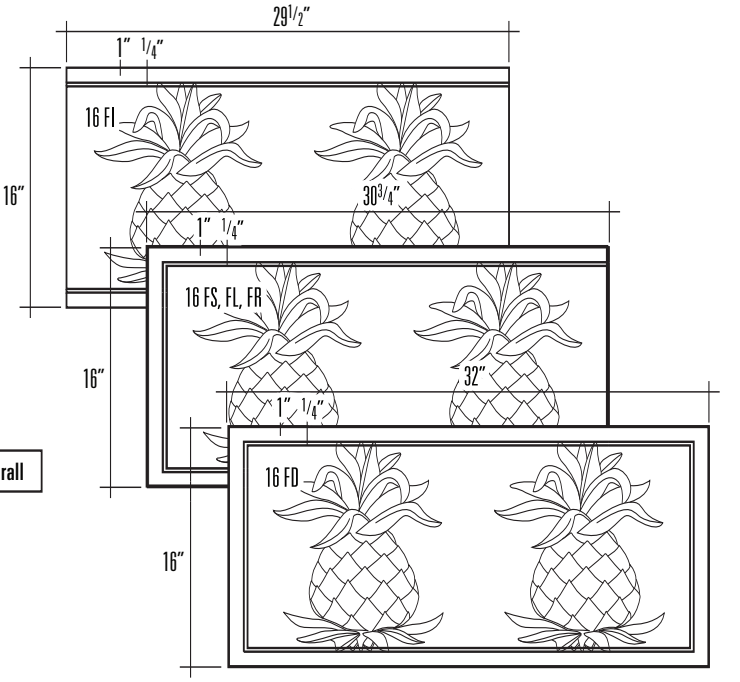

Note: All friezes 1" thick overall

MEDALLION SURROUNDS

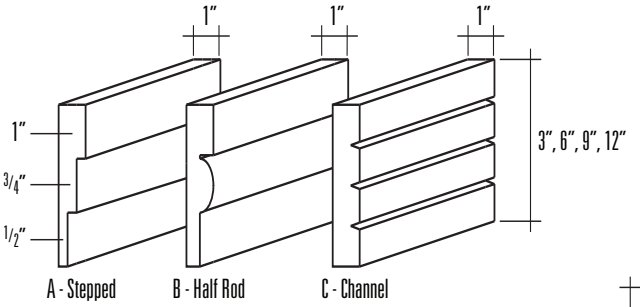

24" LONG STRAIGHT TRIM OR SURROUNDS
FOR SQUARE AND CIRCULAR MEDALLIONS

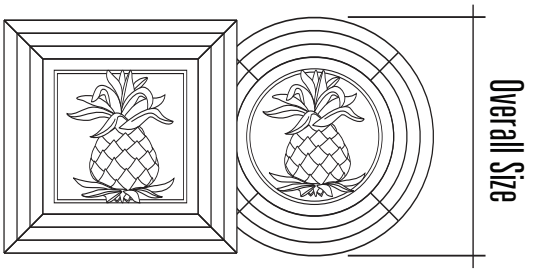

OVERALL SIZE OF MEDALLION
WITH VARIOUS SURROUNDS

Medallion Size	3" wide	6" wide	9" wide	12" wide
8"	14"	20"	N/A	N/A
12"	18"	24"	N/A	N/A
16"	22"	28"	34"	N/A
24"	30"	36"	42"	48"
36"	42"	48"	54"	60"

Note: Length and shape
varies to match medallion

NUMERAL PLAQUES

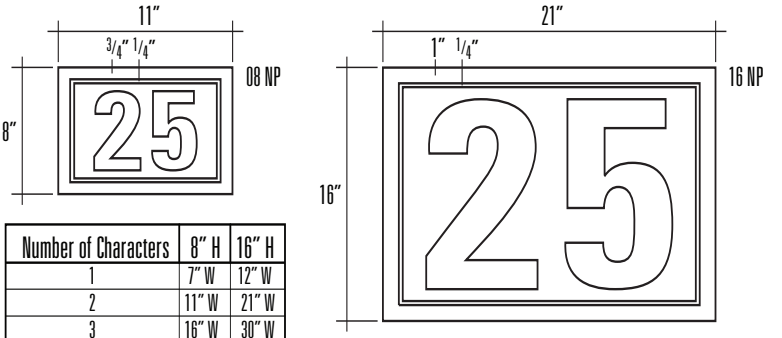

Number of Characters	8" H	16" H
1	7" W	12" W
2	11" W	21" W
3	16" W	30" W
4	21" W	39" W
5	26" W	48" W

FRIEZE ENDS

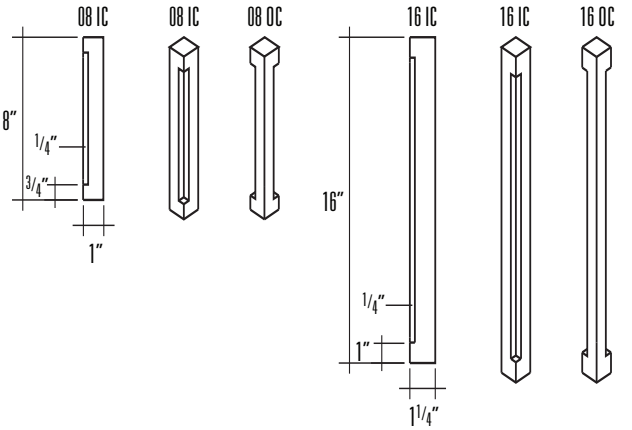

SHAPES CODES DIMENSIONS

© 1992 - 2009 Pineapple Grove Designs
800-771-4595 www.PineappleGrove.com

SHAPES • CODES • DIMENSIONS

Architectural Grilles Are Only Available in SculptMetal™ Finishes

SQUARE ARCHITECTURAL GRILLES

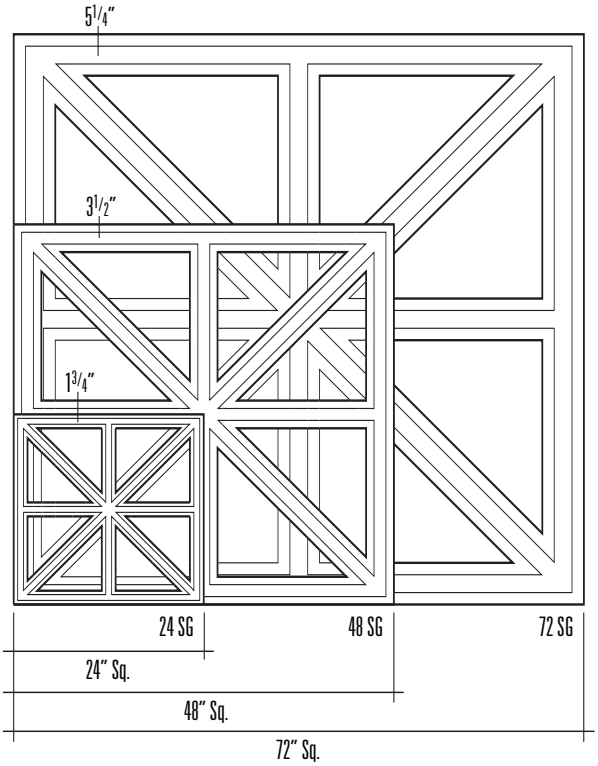

ARCHITECTURAL GRILLE ARCHES

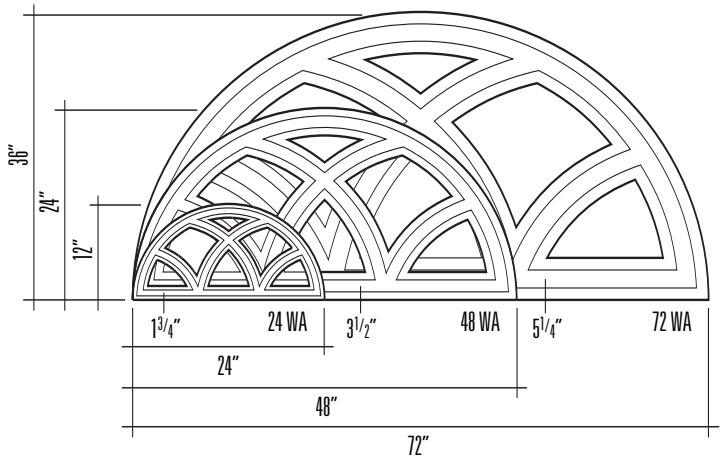

ARCHITECTURAL GRILLE WINDOWS

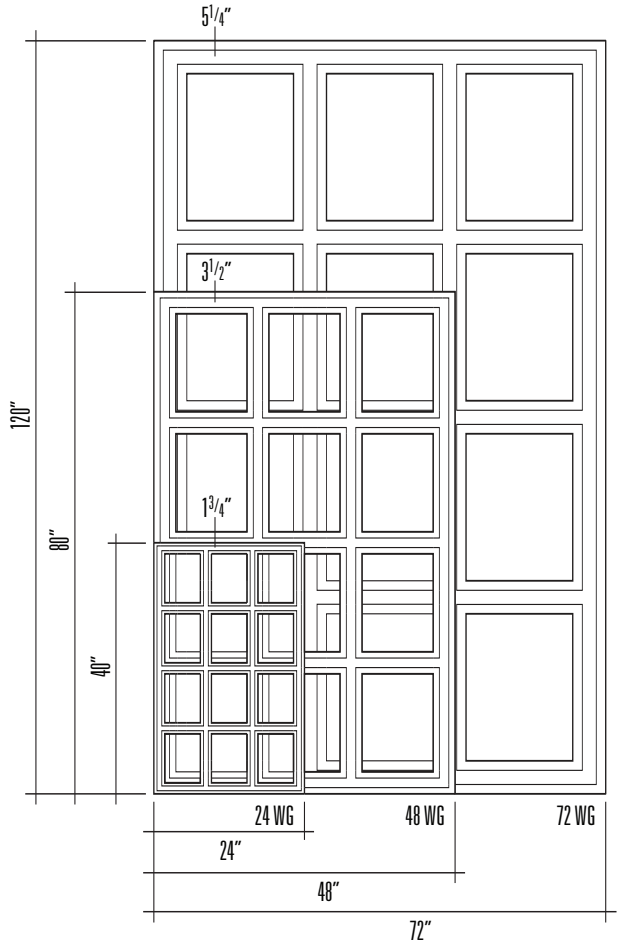

OFFSET BLOCK

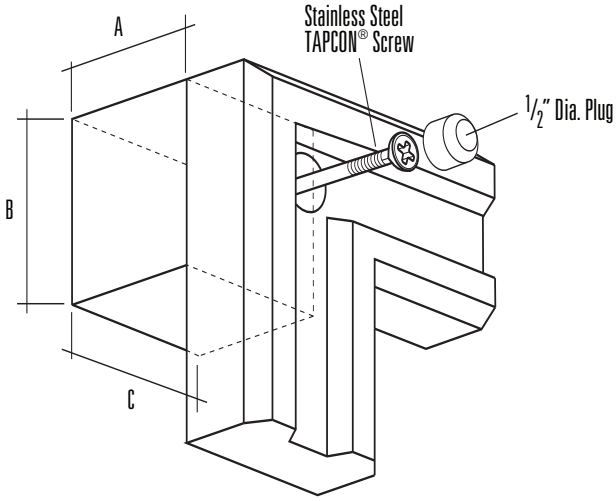

OFFSET BLOCK SIZES

ARCHITECTURAL GRILLE SIZES	A	B	C
24 SG, WA, WG	1 1/2"	1 3/4"	1 3/4"
48 SG, WA, WG	1 1/2"	3 1/2"	3 1/2"
72 SG, WA, WG	1 1/2"	5 1/4"	5 1/4"

DIMENSION TOLERANCES

- Allow ± 1/4" variance in each direction for each dimension.
- Recess openings to receive SculptStone™ or SculptMetal™ must be a minimum of 1/2" larger in height & 1/2" larger in width than item.

SHAPES • CODES • DIMENSIONS

CUSTOM MEDALLIONS

ICON & LETTERING

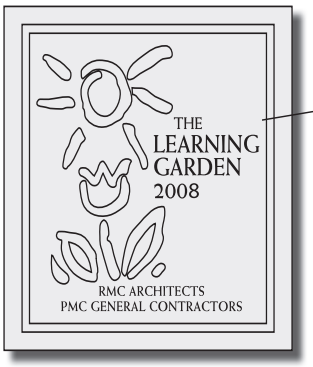

Raised or Incised Letters and Images

SIGNAGE

RAISED OR INCISED IMAGES

MEDALLION, FRIEZE & SURROUND

Modified Standard Medallion

Raised or Incised Letters

Surrounds 3"- 12" Wide 3 Styles

Standard Design

Custom Detail

Carved from your Art or ours

COMBINATION OF CUSTOM AND STANDARD ELEMENTS

LOGOS

Raised or Incised Letters and Images

SIGNAGE

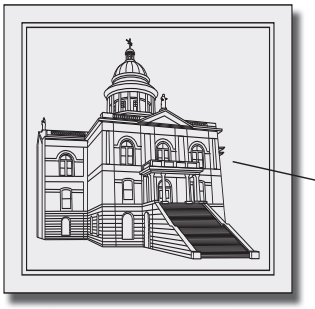

SCULPTED BAS-RELIEF IMAGE

CUSTOM GRILLES

CALLIGRAPHY

GRILLE WITH CHARACTERS

FREE FORM

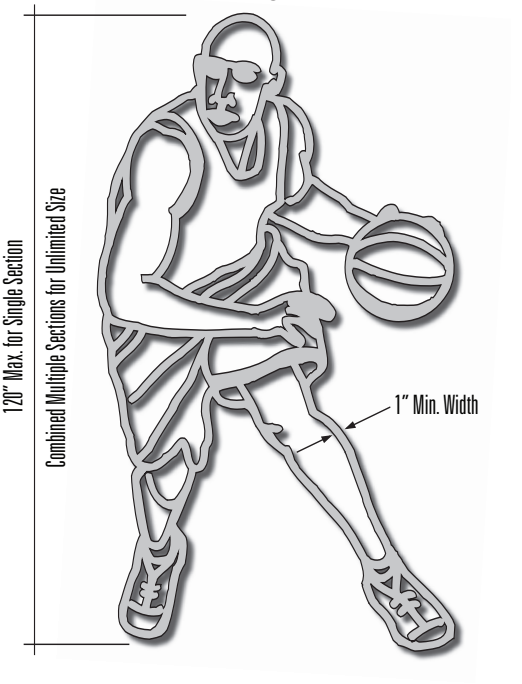

REPRESENTATIONAL FORM

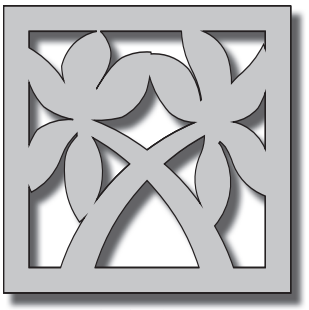

CUTOUT STYLE

BAS RELIEF STYLE

© 1992 - 2009 Pineapple Grove Designs 800-771-4595 www.PineappleGrove.com